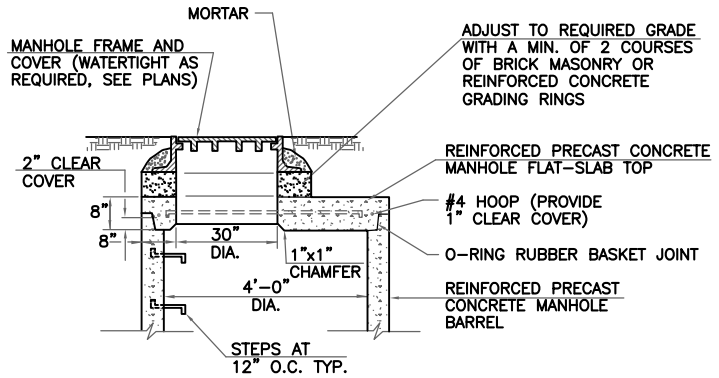

SECTION

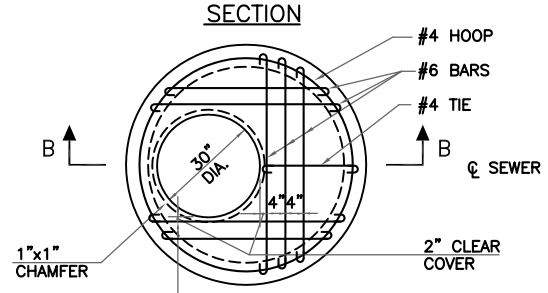

PLAN

SHALLOW MANHOLE DETAILS

NOT TO SCALE

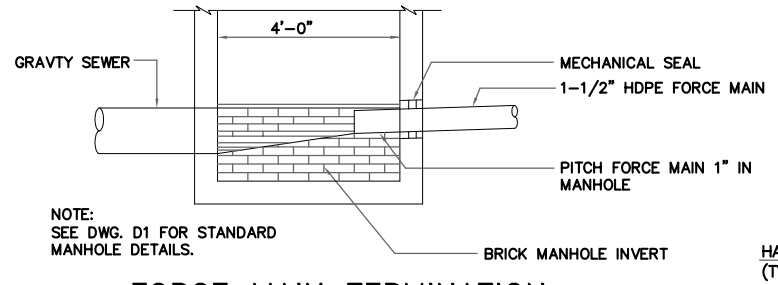

NOTE:
SEE DWG. D1 FOR STANDARD MANHOLE DETAILS.

FORCE MAIN TERMINATION MANHOLE DETAIL

NOT TO SCALE

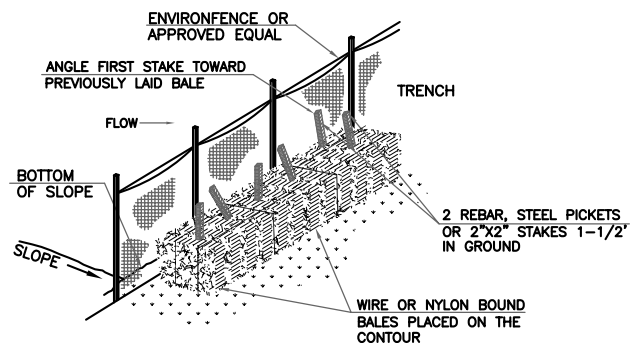

ANCHORING DETAIL

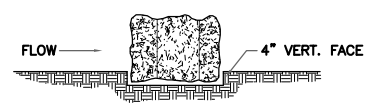

EMBEDDING DETAIL

CONSTRUCTION SPECIFICATIONS

1. BALES SHALL BE PLACED IN A ROW WITH ENDS TIGHTLY ABUTTING THE ADJACENT BALES.
2. EACH BALE SHALL BE EMBEDDED IN THE SOIL A MINIMUM OF 4".
3. BALES SHALL BE SECURELY ANCHORED IN PLACE BY STAKES OR REBARS DRIVEN THOUGH THE BALES. THE FIRST STAKE IN EACH BALE SHALL BE ANGLED TOWARDS PREVIOUSLY LAID BALE TO FORCE BALES TOGETHER.
4. INSPECTION SHALL BE FREQUENT AND REPAIR OR REPLACEMENT SHALL BE MADE PROMPTLY AS NEEDED.
5. BALES SHALL BE REMOVED WHEN THEY HAVE SERVED THEIR USEFULNESS SO AS NOT TO BLOCK OR IMPEDE STORM FLOW OR DRAINAGE.

HAY BALE DETAIL

NOT TO SCALE

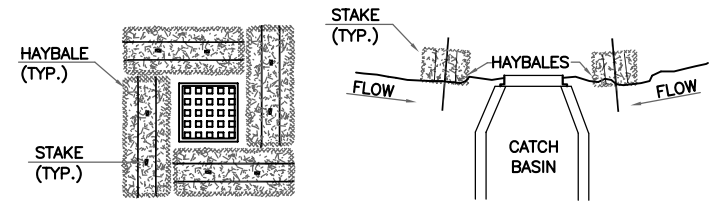

PLAN SECTION

SEDIMENTATION CONTROL AT CATCH BASIN

NOT TO SCALE

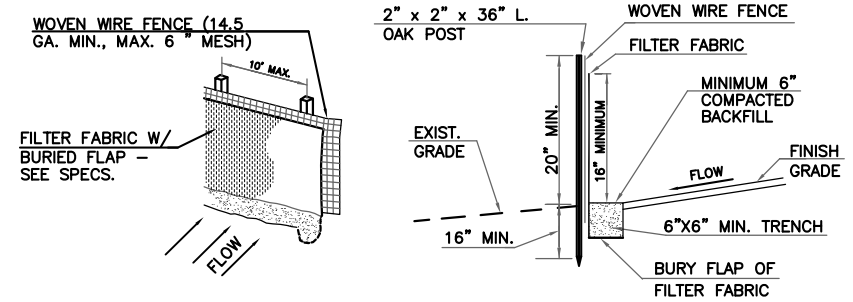

CONSTRUCTION NOTES FOR FABRICATED SILT FENCE:

1. SPACING OF WOOD FENCE POSTS NOT TO EXCEED 10"-0".
2. SILT FENCE SHALL BE INSTALLED BEFORE ANY EARTH REMOVAL OR EXCAVATION TAKES PLACE.
3. WOVEN WIRE FENCE TO BE FASTENED SECURELY TO POSTS WITH WIRE TIES OR STAPLES AT TOP, MID-POINT AND BOTTOM.
4. FILTER FABRIC TO BE FASTENED SECURELY TO WOVEN WIRE FENCE.
5. OVERLAP BY 6", FOLD AND STAPLE ADJOINING SECTIONS OF FILTER FABRIC.
6. MAINTENANCE SHALL BE PERFORMED AS NEEDED, AND THE MATERIAL REMOVED WHEN "BULGES" DEVELOP. DO NOT DEPOSIT MATERIAL NEAR WETLANDS OR WATERCOURSES.

SILT FENCE DETAIL

NOT TO SCALE

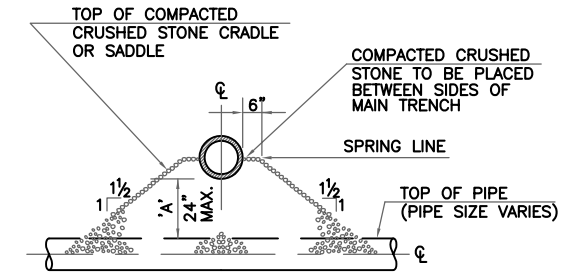

NOTE: IF DIM. 'A' IS LESS THAN 1'-0" SUBSTITUTE A CONCRETE CRADLE

PIPE CROSSING DETAIL

NOT TO SCALE

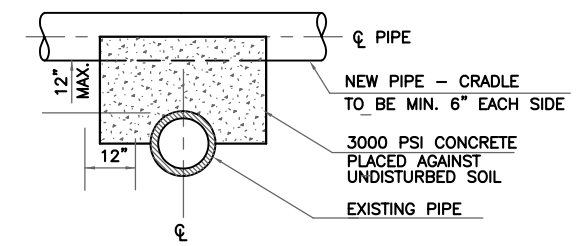

NOTE: NOT FOR PVC PIPE

CRADLE DETAIL

NOT TO SCALE

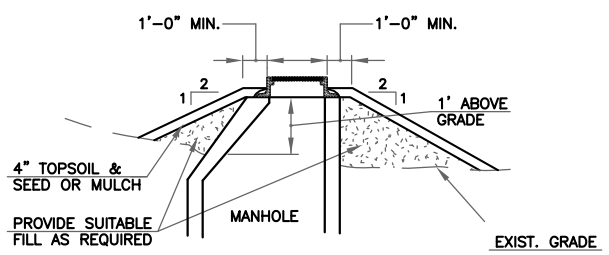

MOUNDING DETAIL

NOT TO SCALE

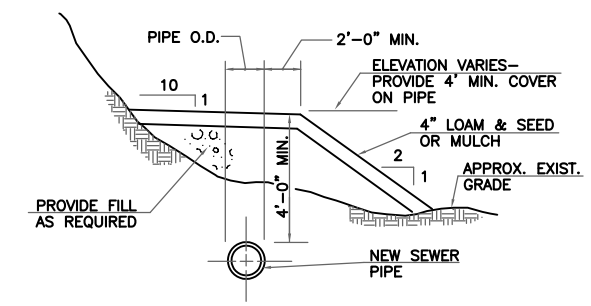

SPECIAL FILL SECTION

NOT TO SCALE

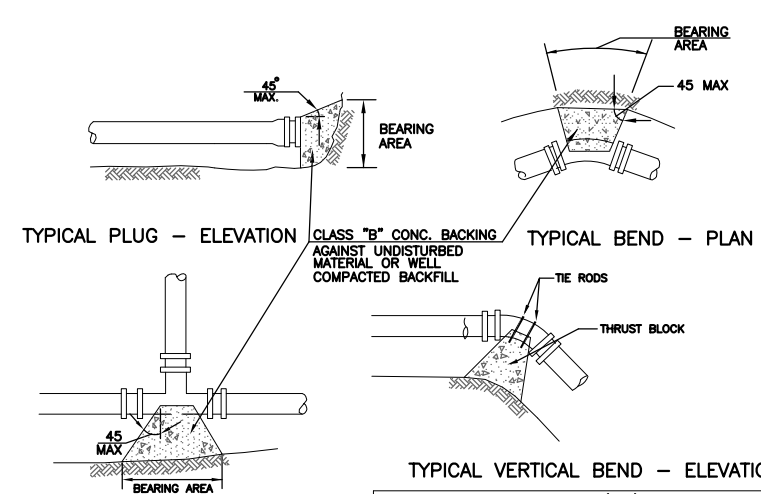

1. BLOCK WIDTH SHALL BE EQUAL TO OR NOT GREATER THAN TWICE THE BLOCK HEIGHT.
2. PIPE JOINTS SHALL NOT BE ENCASED WITH CONC.

THRUST BLOCK BEARING AREAS (S.F.)					
PIPE SIZE	TEES & ENDS	90 B	45 B	22 1\2 B	11 1\4 B
6&8	6	8	4	2	1
12	12	16	9	5	2.5

NOTE:
AREAS SHOWN ARE BASED ON PIPE WORKING PRESSURE OF 150 PSI AND SOIL BEARING PRESSURE OF 3000 PSF. OTHER VALUES AS DETERMINED BY THE ENGINEER MAY CAUSE BEARING AREAS TO CHANGE.

THRUST BLOCK DETAILS

NOT TO SCALE

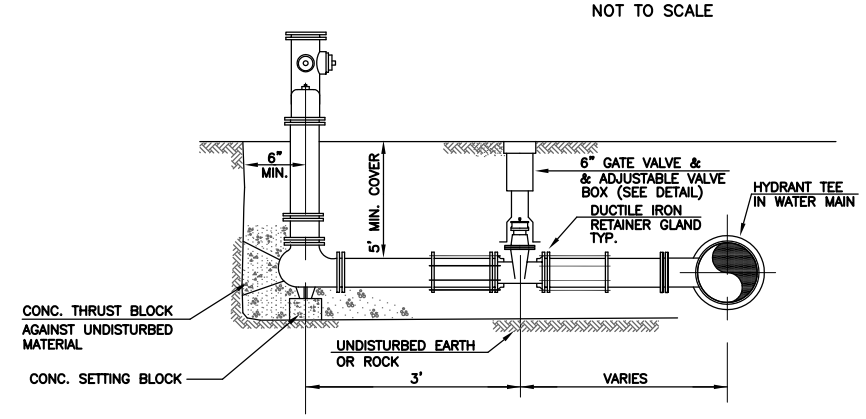

HYDRANT AND VALVE DETAIL

NOT TO SCALE

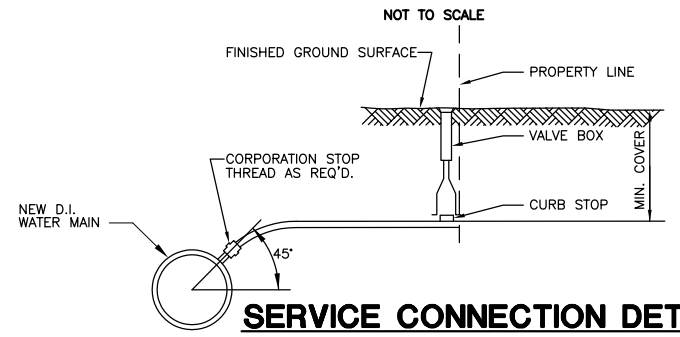

SERVICE CONNECTION DETAIL

NOT TO SCALE

'RECORD DRAWING'

I HEREBY CERTIFY THAT TO THE BEST OF MY KNOWLEDGE, BASED UPON CONSTRUCTION RECORDS PROVIDED BY THE RESIDENT ENGINEER AND THE CONTRACTOR, ALL WORK SHOWN ON THIS DRAWING HAS BEEN COMPLETED AS SHOWN.

HOYLE, TANNER & ASSOCIATES, INC.

NOTE:

ALL PROJECT REQUIREMENTS AS SET FORTH ON THIS SHEET HAVE BEEN COMPLIED WITH DURING THE COURSE OF CONSTRUCTION. ALL NOTE WORDING CONTAINED HEREON IS UNDERSTOOD TO BE PAST TENSE.

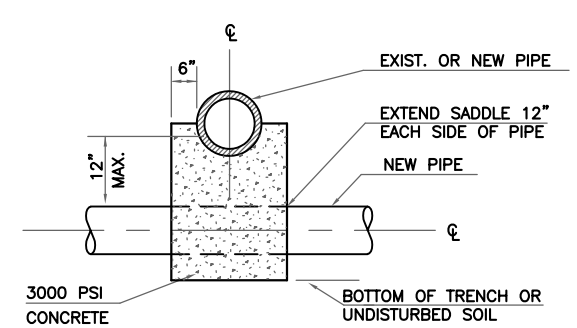

NOTE: NOT FOR PVC PIPE

SADDLE DETAIL

NOT TO SCALE

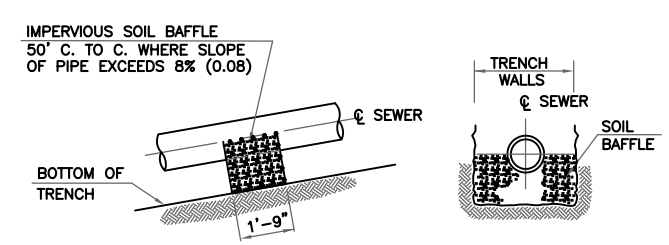

TRENCH BAFFLE DETAIL

NOT TO SCALE

ENGINEER/ARCHITECT

REV.	DESCRIPTION	DR. BY	CHKD. BY	APPD. BY	DATE
1.	RECORD DRAWING	S.R.	W.C.	W.C.	3/03

PROJECT NO. 105710

FILE NAME MISCDET

DO NOT SCALE DRAWING

HTA Hoyle, Tanner & Associates, Inc.
Consulting Engineers
150 Dow Street • Manchester • New Hampshire 03101

DES. BY JAH | DR. BY CAB | CHKD. BY NLT

DATE: FEB. 2002

SCALE: AS SHOWN

CHERRY VALLEY SEWER DISTRICT
LEICESTER, MASSACHUSETTS

PLAN AND PROFILE

MISCELLANEOUS DETAILS

DRAWING NO. 18

SHEET 18 OF 19